Rev Ind	Revision	Appd	Date

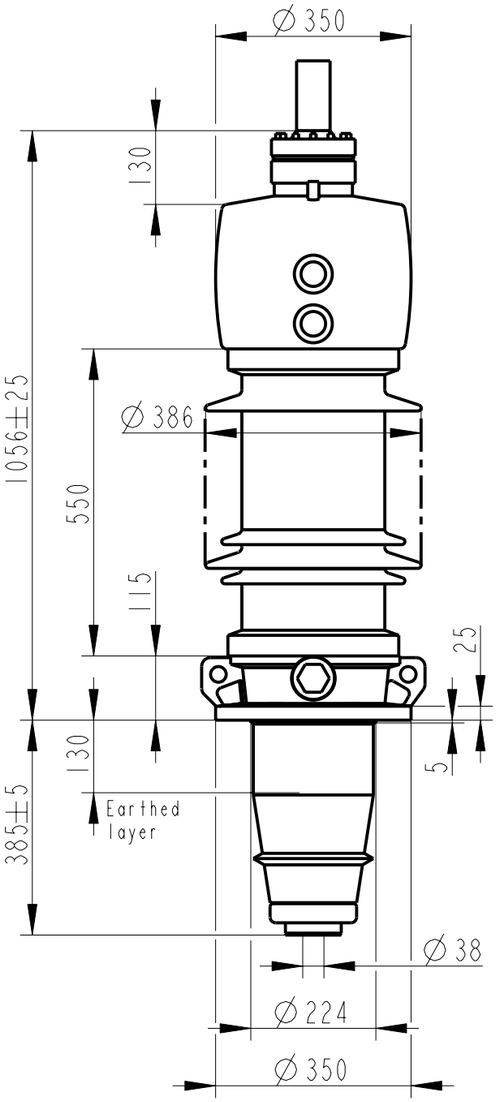

Bushing Data:

Rated Voltage	52	kV
Phase to-earth Voltage	52	kV
Dry Lightning Impulse 1,2/50µs	250	kV
Wet Switching Impulse	210	kV
Wet Power frequence AC	120	kV
Routine test 1min dry 50Hz	120	kV
Rated Current	5000	A
Creepage Distance	1425	mm
Mass	205	kg

Ordering Data:

BUSHING

	COLOUR AIR INSULATOR
LF121051 -F / -AF	BROWN / LIGHT GREY

OUTER TERMINAL

	H2 (mm)	D2 (mm)
LF170 073-A Al	125	60
LF170 073-B Cu	125	60
LF170 073-G Cu/Ag	125	60

OTHER TYPES ON REQUEST

END-SHIELD

LF170 046-U EPOXY INSULATED
LF170 046-UP INSULATED WITH 3 mm PRESSBOARD

DRAW ROD SYSTEM

LF170 059 LOWER DRAW ROD WITH N1=4 OR N1=6
LF170 057 UPPER DRAW ROD

INNER TERMINAL

	D3 (mm)	D9 (mm)	Cond.area (mm2)	Current (A) IEC	IEEE
LF170 056-A	0 *)	35	-	-	-
LF170 056-B	15	35	95	390	370
LF170 056-C	30	35	285	1000	830

*) WITH PILOT HOLE D=5

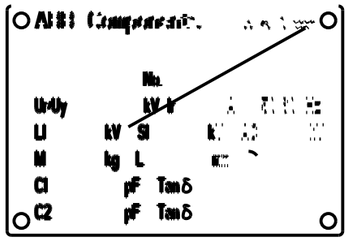

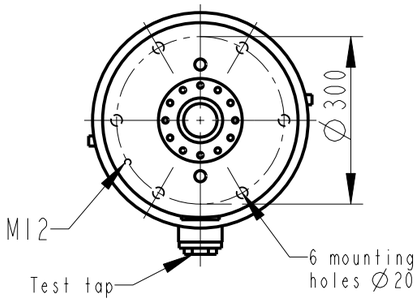

INNER TERMINAL / OUTER TERMINAL

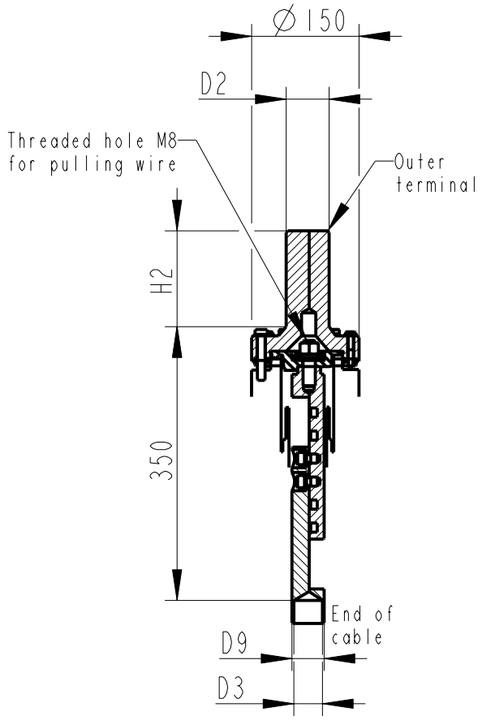

END SHIELD

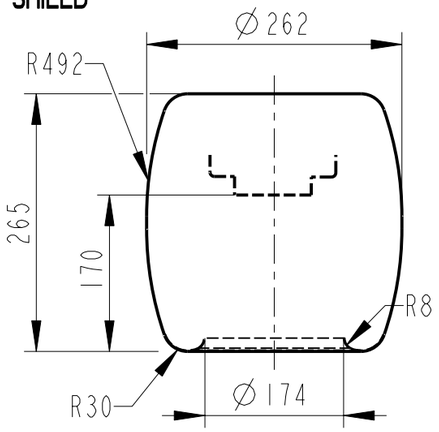

DRAW ROD SYSTEM / OUTER TERMINAL

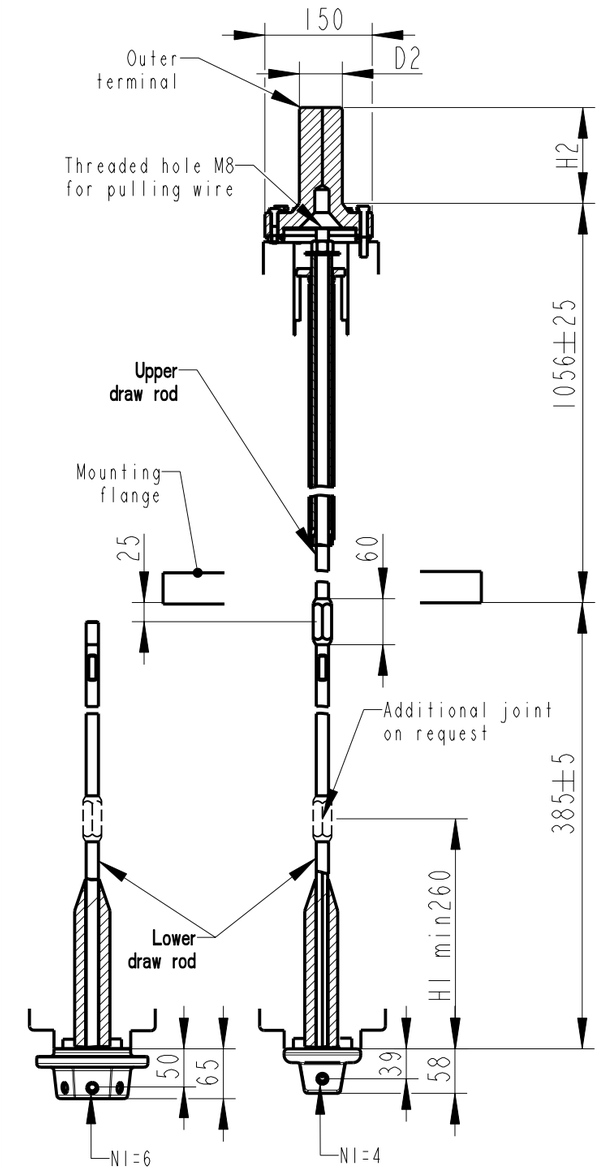

N1=Number of holes M12, equipped with thread insert with screw lock, depth 20, for cable lugs.

Based on	Reg. No.	Title	
Prepared: Lövnord	Responsible department: COM/BK 0022	GOE-250-210-5000-0	
Approved: Johansson	Take over department		Language: 82
Design engineering review: Gutman	Database		Page: 1(1)
ABB Components		Document No. 2751369-52	

We reserve all rights in this document and in the information contained therein. Reproduction, use or disclosure to third parties without express authority is strictly forbidden. ©ABB